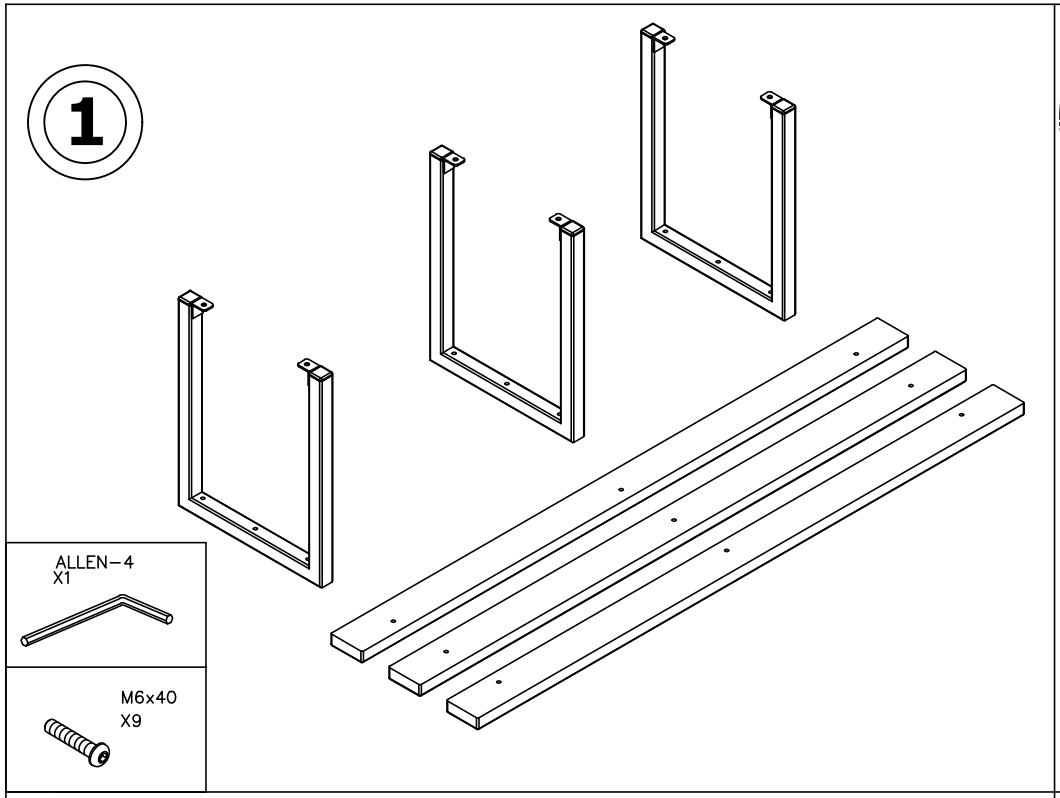
1
ALLEN-4
X1
M6x40
X9

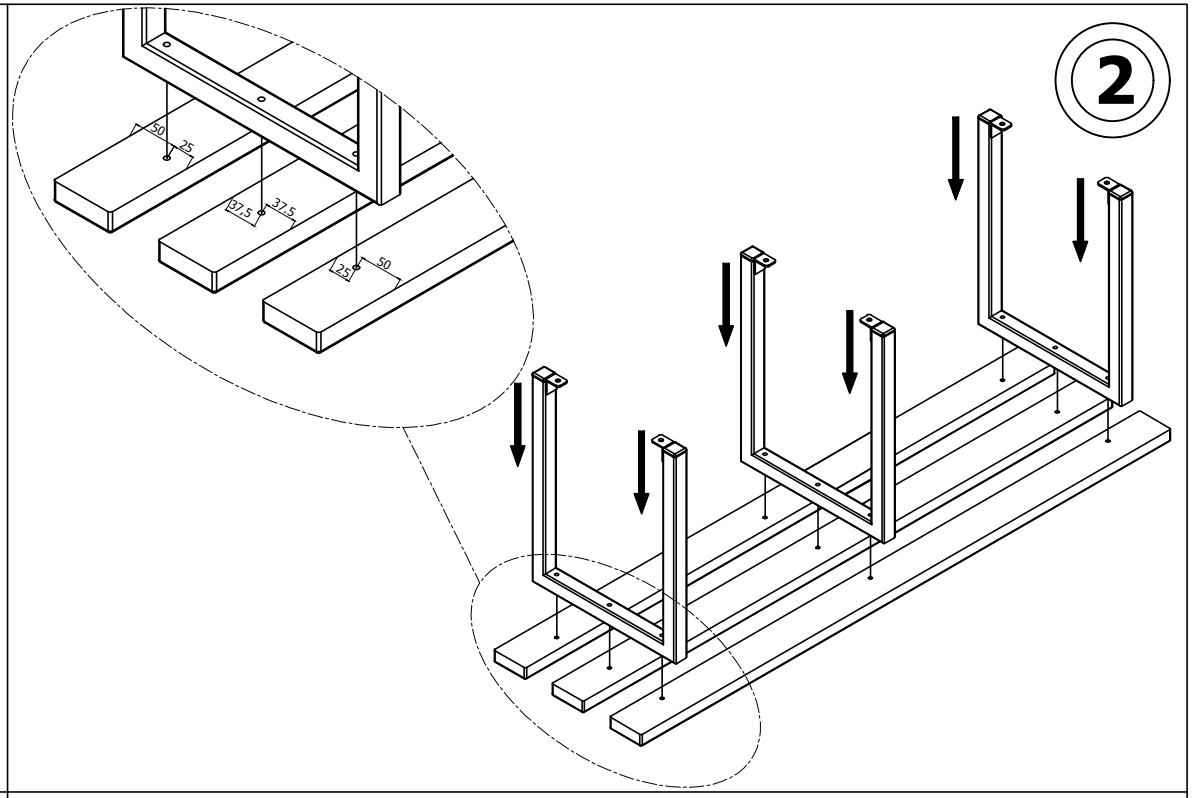
2
50
25
37.5
37.5
25
50

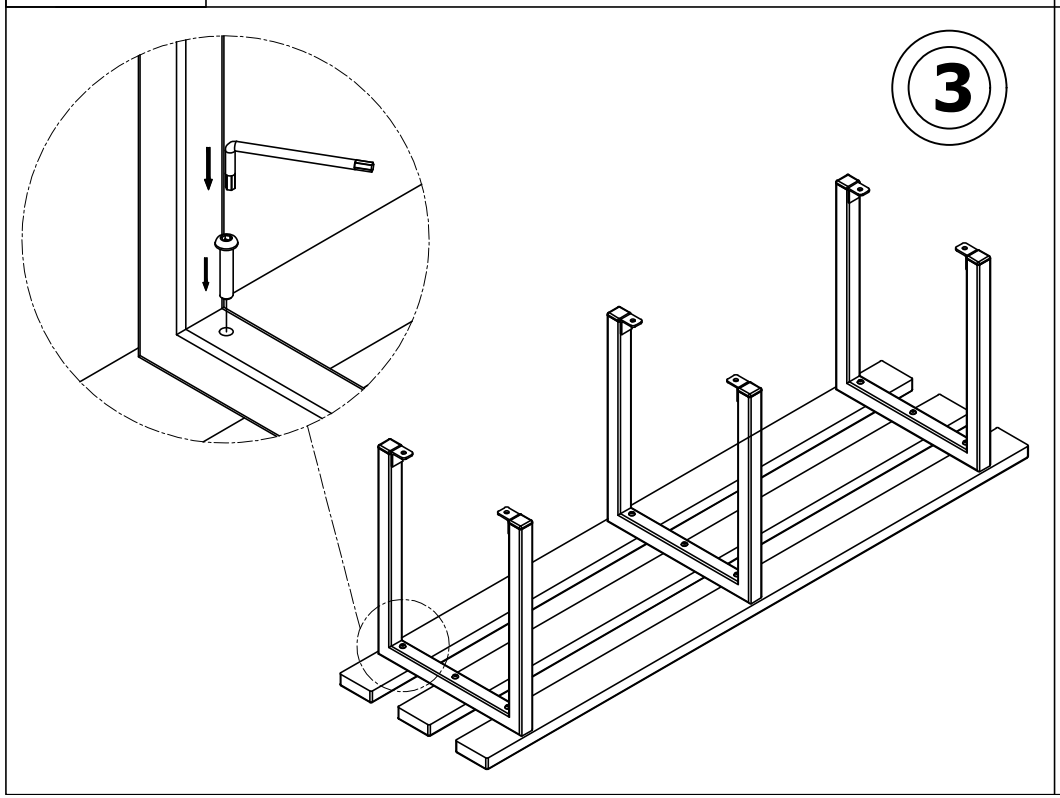
3

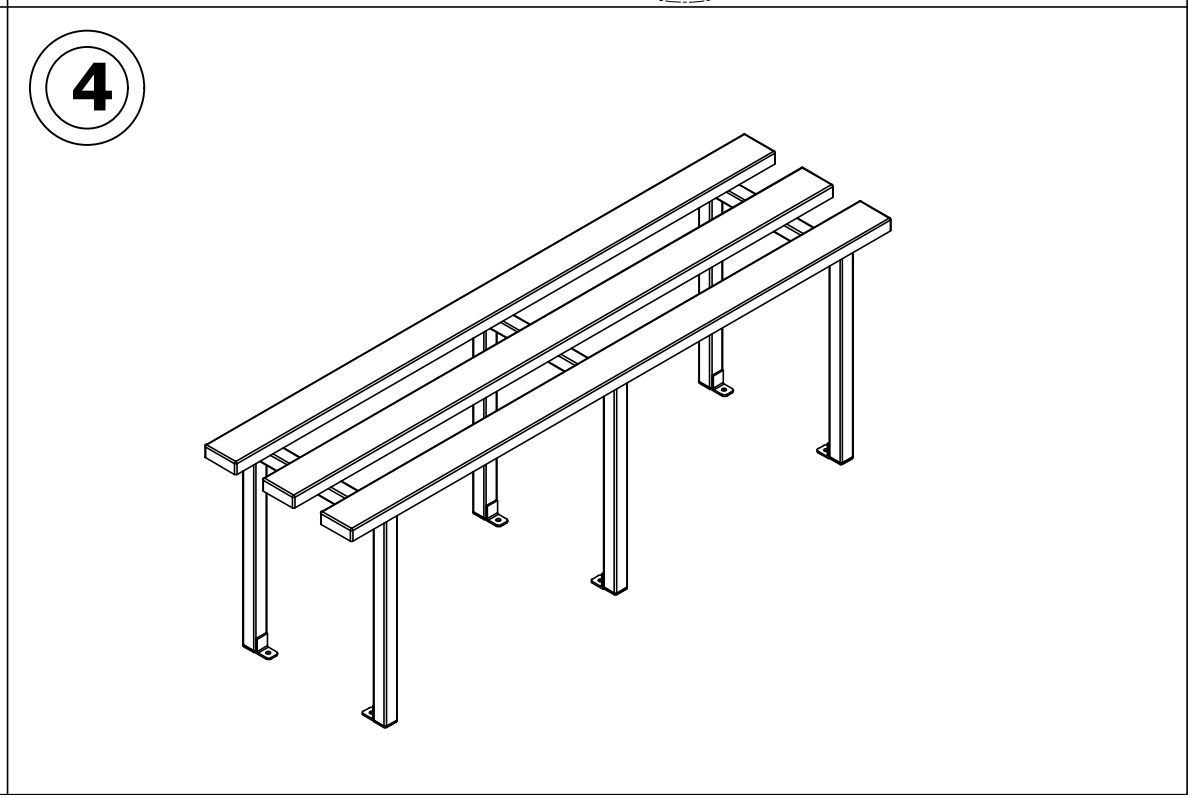
4