Natural Pine Bookcase - 6 Shelves

NPB6

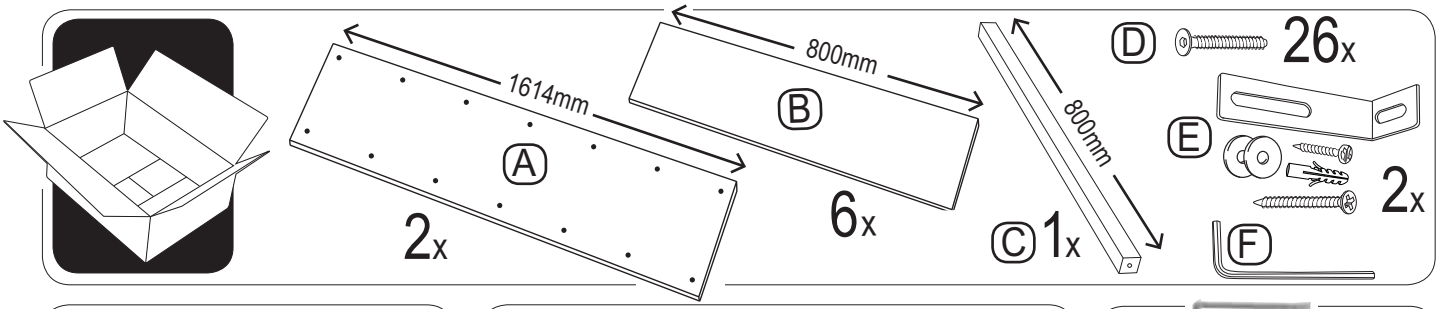

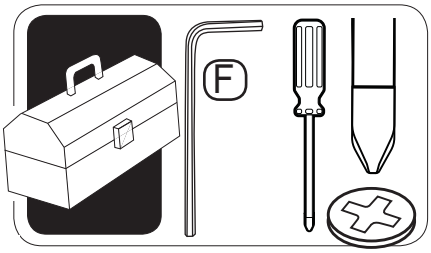

1

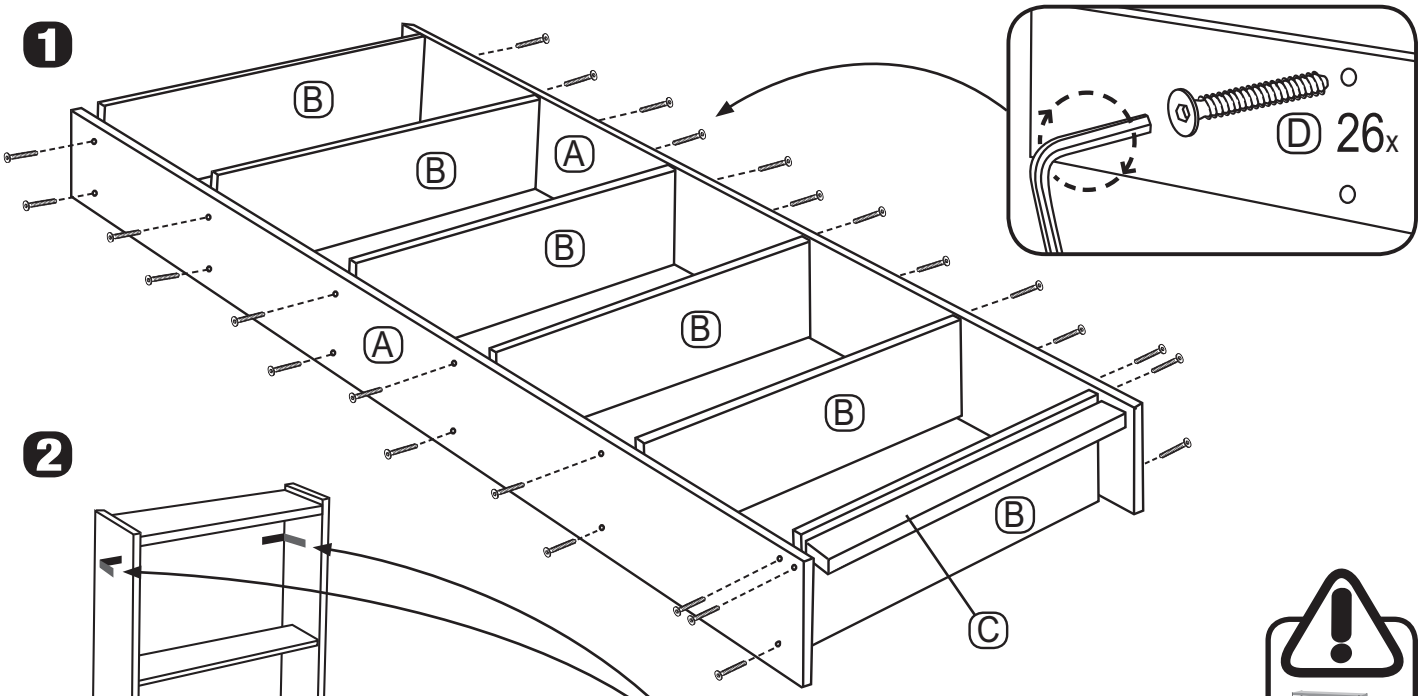

2

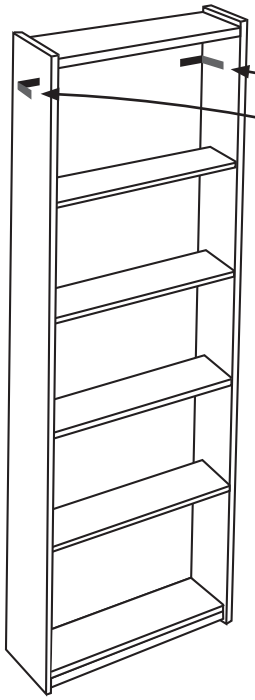

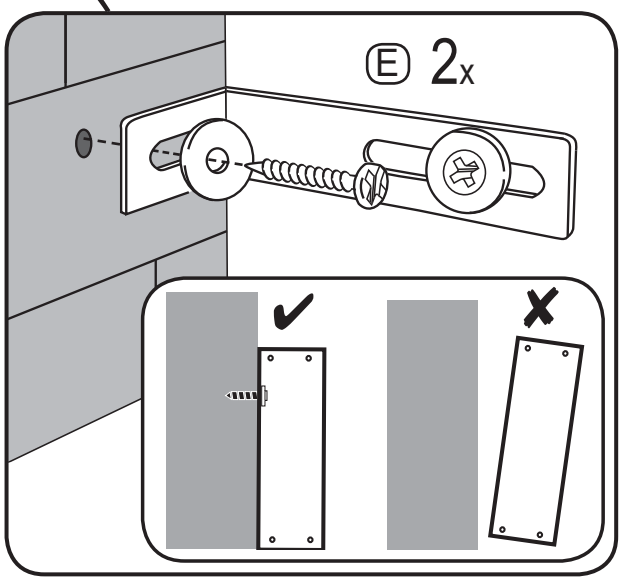

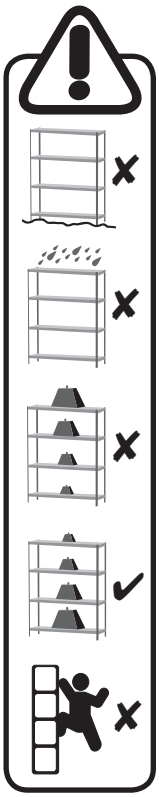

100%
From well-managed forests
www.fsc.org Cert no. SGS-COC-1142
© 1996 Forest Stewardship Council